Vari-Gage™ Operations Manual

EG Controls
JACKSONVILLE, FLORIDA

TABLE OF CONTENTS

CHAPTER 1 INTRODUCTION 5

1.1 EQUIPMENT APPLICATION NOTICE 5
1.2 TRANSDUCER RESOLUTION 5

CHAPTER 2 OPERATION 7

2.1 GENERAL 7
2.2 APPLYING POWER TO THE VARI-GAGE™ 9
2.3 AUTO MODE 9
2.4 OPERATIONAL OVERVIEW 9
2.5 LEVEL ALARMS 9
2.6 LAMP TEST 10
2.7 SIMULATE (MANUAL OPERATION) 10
2.8 MEMORY 10

CHAPTER 3 CONFIGURATION 11

3.1 INPUT CONFIGURATION 11
3.2 OPTION CONFIGURATION 12

CHAPTER 4 VARIABLE SPEED PUMPING OPERATIONAL THEORY 16

4.1 LOAD SHARING DRIVES 16
4.2 UNDERSTANDING MINIMUM SPEED SETTINGS FOR VFD SYSTEMS 16
4.3 DETERMINING MINIMUM SPEED 17
4.4 MINIMUM SPEED FOR ONE PUMP 19
4.5 MINIMUM SPEED FOR TWO PUMPS 19
4.6 MINIMUM SPEED FOR THREE PUMPS 19
4.7 MAXIMUM SPEED 20
4.8 SPEED LEVEL SETTINGS (MINIMUM AND MAXIMUM) 22
4.9 CREATING YOUR SETTINGS: 22
4.10 USING DRIVES INDEPENDENTLY 23

CHAPTER 5 CALIBRATION 24

5.1 CALIBRATION MODE OVERVIEW 24
5.2 CALIBRATION PROCEDURE 25

CHAPTER 6 PROGRAMMING 28

6.1 PROGRAMMING THE VARI-GAGE™ 29
6.2 EXITING THE PROGRAM MODE 31

CHAPTER 7 INSTALLATION 32

7.1 MOUNTING 32
7.2 ANALOG INPUTS 33
7.3 COMMUNICATION 34
7.3 EXTENDED MONITORING MODULE 36
7.4 OPTIONAL BARGRAPH 36
7.5 PNEUMATIC CONNECTION 36

CHAPTER 8 TROUBLESHOOTING 37

8.1 ERROR CODES 37

CHAPTER 9 STATEMENT OF WARRANTY 38

APPENDIX 39
A. IMPLEMENTATION OF A THIRD PARTY SCADA SYSTEM 39
B. CALIBRATION THEORY 43
C. CALIBRATION MATH 44
D. FACTORY DEFAULT SETTINGS 45

Chapter 1 Introduction

IMPORTANT: We recommend that you thoroughly read these instructions before operating the Vari-Gage.

Congratulations on purchasing an EG Controls Vari-Gage Controller. Please be sure to carefully read and understand these instructions before operating. This manual should be kept in a convenient location for reference. If you have any questions, please do not hesitate to call your local representative or EG Controls directly for technical assistance.

1.1 Equipment Application Notice

Any failure of this instrument or system, for whatever reason, may leave an operating process without protection. Depending upon the application, this could result in possible damage to property or injury to persons. Please consider the need for additional backup equipment or alternate means of protection such as standby float controls, alarms, output limiters, fail-safe valves, relief valves, emergency shutoffs, emergency switches, etc. If additional information is required, please contact your local representative or EG Controls, Inc.

To contact EG Controls:

EG Controls
11790 Philips Highway
Jacksonville, Florida 32256
Telephone: 904/292-0110
Fax: 904/292-0119
Email: sales@egcontrols.com
Or visit our website at www.egcontrols.com

1.2 Transducer Resolution

The standard operating range of the internal pressure transducer within the Vari-Gage is 0-35 feet. Should your application require a lower control range , 0 - 2 feet for example, you can re-calibrate the Vari-Gage to achieve increased resolution without changing your sensor. Owing to the high resolution capability of the 14 bit processor in the Vari-Gage, resolution of hundredths of a foot can be achieved with a simple decimal point change in the calibration procedure. The sensor will perform as well in the 0.00 - 2.00 foot control range as it does in the 0.0 - 35.0 foot control range. The only requirement is that the control range be within the limits of 0 - 35 feet. For more information, please refer to Section 5.2 on Calibration Procedure on page 26 of this manual.

Chapter 2 Operation

2.1 General

A typical Vari-Gage Model 3300 is shown below:

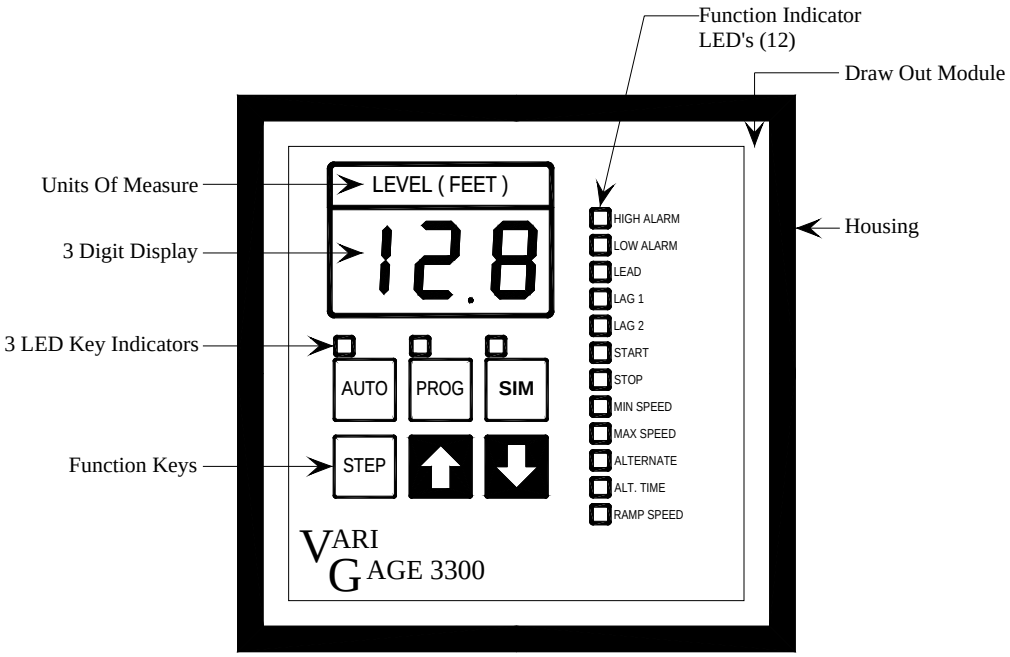

Figure 2-A Vari-Gage Model 3300

The Vari-Gage controller draw-out module can be easily removed from the outer housing. Grasp the lower portion of the frame and use a small screwdriver to press down the internal clip that shows through the rectangular opening at the base of the housing. When you feel the clip release, the handle will swing out and allow you to easily remove the draw-out module. You will need to remove the draw-out module to locate internal DIP switches and select the placement of the input jumper to configure the Vari-Gage to the type of sensory input required. See section 3.1 on page 11 for more information.

The full Vari-Gage™ control system, as pictured on the following page (Figure 2-B on page 8), includes the Vari-Gage™ microprocessor unit and several other operational features offered by EG Controls including bright LED output status indicator lights and printed programming instructions on the front of the panel.

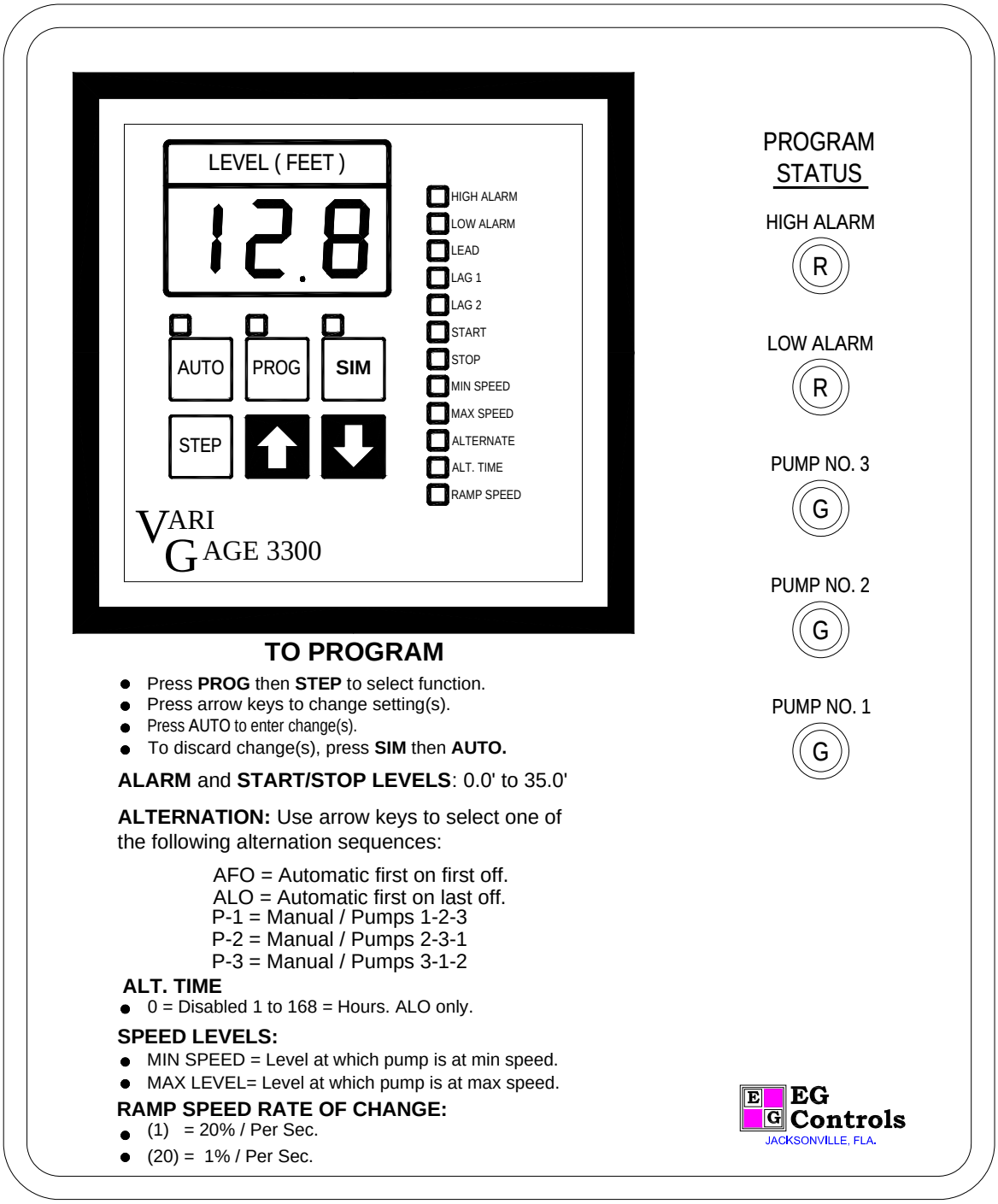

2-B Vari-Gage™ Control System Front Panel

2.2 Applying Power to the Vari-Gage™

When power is first applied to the Vari-Gage™, you will see a LAMP TEST. During this test, the Vari-Gage™ begins sensing the process input and checking the memory (RAM, EPROM and EEPROM) for data integrity. When the test is complete, and the level averaging system has established valid data, the current level will be shown in the digital display.

If pumps are being called to operate, their activation will be staggered in 10 second intervals to prevent simultaneous starting.

2.3 Auto Mode

In the Auto mode, the controller will respond automatically to the system configuration and to the programmed setpoints in the controller.

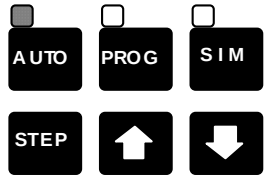

Figure 2-C AUTO Mode Key

2.4 Operational Overview

During the LAMP TEST that begins when the Vari-Gage™ is switched on, every LED on the panel is illuminated. This test can be repeated later in AUTO mode (the normal operating mode) by pressing the UP arrow. In AUTO mode, the display shows the calibrated level as read from the input. The display is updated continuously except immediately after power-up or in case of an error. In Simulate (SIM) mode, the display behaves identically to the AUTO mode, except that the value is adjusted manually using the UP and DOWN arrows.

In case of an error, an error code will be displayed--see Error Codes Section 8.1 on page 37 for specific codes and code definitions. For example, if an attempt was made to calibrate two different level readings at the same point, or to calibrate the unit backwards (high reading at low level), the unit would show “E06”. The error message is designed only to tell the operator that the data entered cannot be used and to try again. The system has not been changed or affected at all. A more serious error code would be “E03”, meaning the A/D converter chip failed, the unit could not measure the input and all outputs have been turned off.

2.5 Level Alarms

The High and Low alarm setpoints may be set anywhere within the control range, but the High alarm must always be greater than the Low alarm. These alarm settings may be defeated by setting them to zero. If desired, either or both alarms may be set to redundantly stop the pumps (see Section 3.2 on Option Configuration on page 12 regarding high level and low level inhibit and the internal DIP switches). There is a five (5) second delay on all alarm outputs.

2.6 Lamp Test

When power is first applied to the Vari-Gage™, the Lamp Test is activated while the Analog Input is being stabilized. At any time thereafter, the lamps may be tested by pressing the UP arrow while in AUTO mode.

During the Lamp Test, all fifteen (15) LED's should light steadily, and the three-digit display should show "8.8.8." representing all segments of all digits and the three decimal points.

The Lamp Test has no effect on the normal operation of the unit.

2.7 SIMulate (Manual Operation)

When in the SIMulate mode, the controller will function as in the AUTO mode, but the UP and DOWN arrows will be used to vary the numeric display.

The following steps occur during a SIMulate test:
1) The transducer or Analog Input is taken out of the circuit.
2) The pumps turn on and off based on the simulated level.
3) The Analog Output (AO) varies based on the simulated level.
4) The Alarms turn on and off based on the simulated level.

Placing the system in the SIM mode does bypass the actual system sensor. A three minute "deadman" timer will automatically return the controller to the automatic mode if no Key button is pressed for three minutes**.**

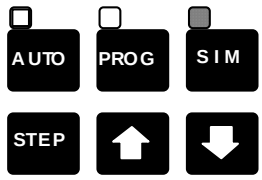

Figure 2-D SIM Mode Key and Indicator

2.8 Memory

When calibration or programming is complete and the AUTO mode is pressed, all changes in setpoints and calibration are stored in Electrically Erasable Programmable Read-Only Memory (EEPROM). This ensures that the program, setpoints, and calibration will remain intact in the event of power failure. Data is saved for up to 100 years without power. When power is re-established, the program and calibration are recalled and transferred to the working memory of the microprocessor. An error detection algorithm is used to detect any possible storage errors. If an error is ever detected on power-up, all outputs are disabled and the Vari-Gage™ will automatically go into PROGram mode. At that time, the operator may examine and re-enter any data values needed.

Chapter 3 Configuration

3.1 Input Configuration

A choice of three process inputs are offered in the Vari-Gage™ 3300: 4 - 20mA DC, 0 - 10VDC and 0 - 35 feet of water with the internal pressure transducer. Three jumper pins on the rear PC board of the unit are used to select the desired input. First, remove the unit from the housing. Next, turn the unit around to find three input pins labeled W1, W2 and W3 on the rear P.C. Board (see Figure 3-A). Use the chart below to determine the jumper location and move the jumper to the desired input pin location.

Caution: Only one jumper should be installed on this board.

Jumper Location	Type of Input
W1	4 - 20mA DC
W2	0 - 35 feet of water (15 PSI)
W3	0 - 10VDC

Important! The unit is shipped from the factory pre-calibrated for either pressure, voltage or current input based on panel requirements. Please do not move jumpers or re-calibrate without fully understanding the calibration settings. See Calibration Procedure Section 5.2 on page 26.
Warning! Damage to the Vari-Gage™ may result if jumpers are moved without properly re-calibrating the unit.

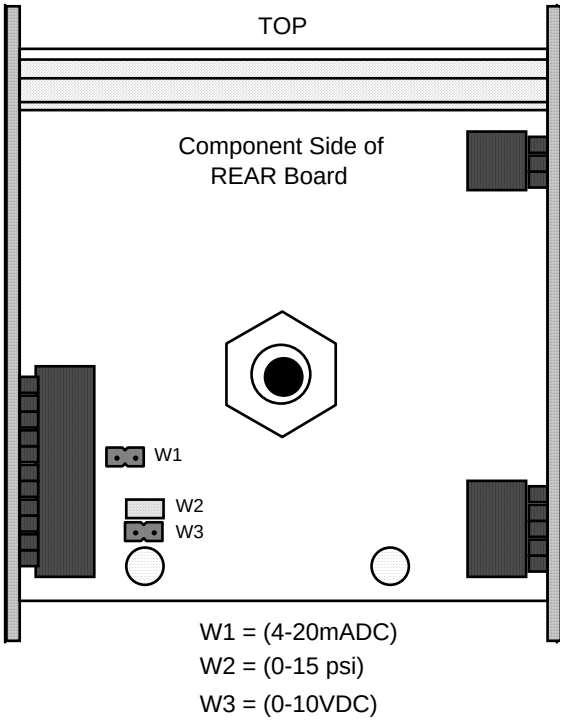

Figure 3-A Location of Input Jumpers

3.2 Option Configuration

Various options may be selected by simply altering the DIP switch settings on the CPU board. To locate the DIP switches, remove the draw-out module from the housing (see page 7). With the faceplate directly in front of you, look for the burnt orange rectangle on the right hand vertical board. It is located beyond the blue rectangle and before the midpoint of the board. This burnt orange rectangle is the set of DIP switches represented in Figure 3-B.

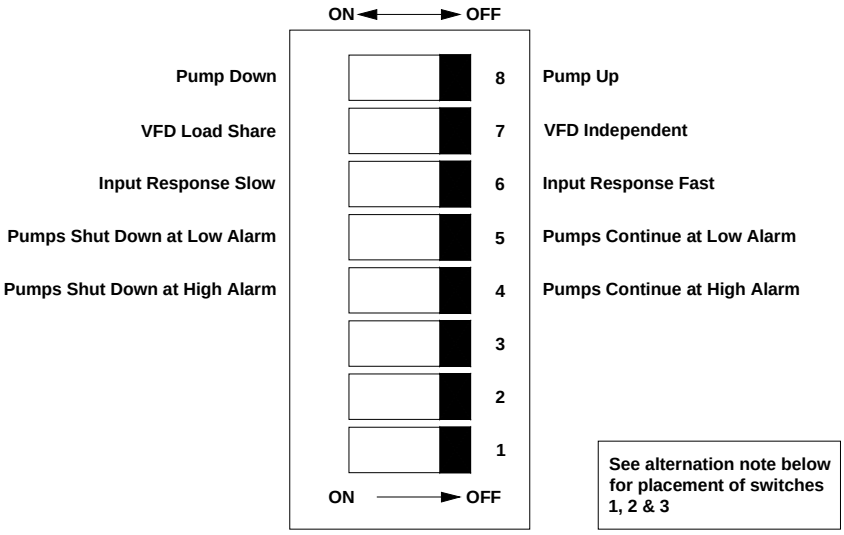

Figure 3-B Option Configuration DIP Switches

Number of Pumps to Alternate:

The first three (3) switches are used to set up the number of pumps to be included in the alternation scheme. Pumps not included in the alternation can be used and set to start or stop anywhere throughout the control range. However, pumps not included in the alternation will always be started last in the sequence. To disable a pump not used in the alternation scheme, set the start and stop setpoints outside of the control range.

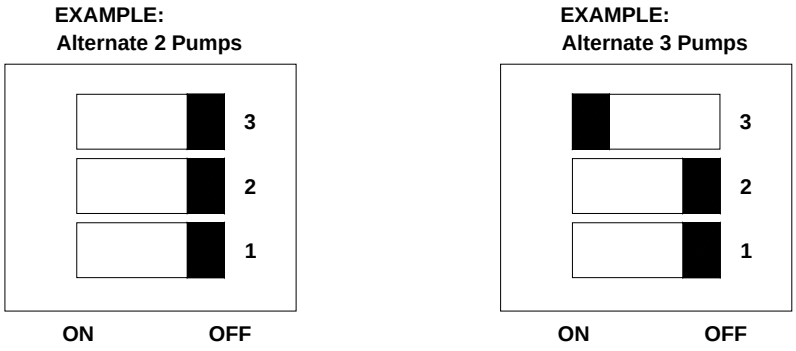

For two pumps, switches 1,2,3 are OFF.
For three pumps, switches 1 and 2 are OFF, 3 is ON.

High Level Inhibit:

If switch 4 is OFF, outputs will function normally. If switch 4 is ON, all pump outputs will be turned OFF on high level alarm.

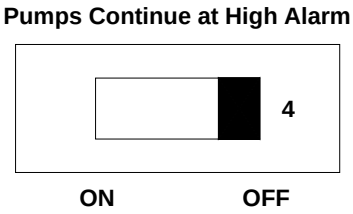

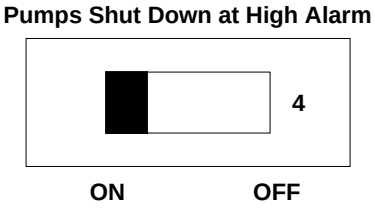

Low Level Inhibit:

If switch 5 is OFF, outputs will function normally. If switch 5 is ON, all pump outputs will be turned OFF on low level alarm.

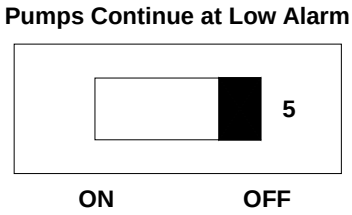

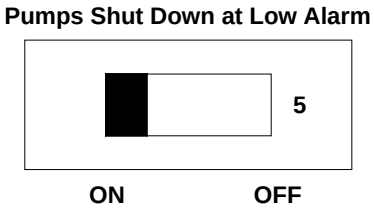

Analog Input Response:

If switch 6 is OFF, the Fast Response function will be active and will immediately display the value of the analog input.

If switch 6 is ON, the Slow Response function will be active and the analog input will be averaged over a larger number of samples. When power is first applied, the LED will display “SLO” at the beginning of the process to collect the required input samples. After this process is complete, it will show the average value of the input samples. This level averaging is useful in smoothing out wave action, pressure blips, water hammer or other noise.

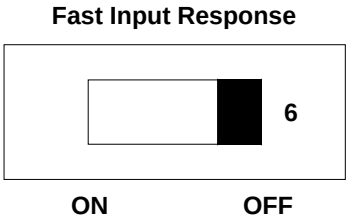

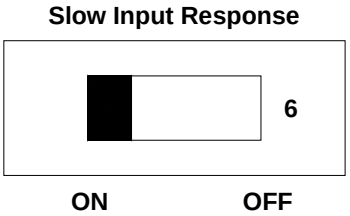

VFD Mode:

If switch 7 is OFF, each VFD output is controlled between its pair of setpoints (MIN and MAX). If this switch is ON, all VFD outputs track between the pair of setpoints (MIN and MAX) established for the number of pumps running at a given point in time. (See page 16 for more information on load sharing.)

VFD Independent

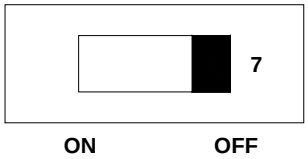

VFD Load Sharing

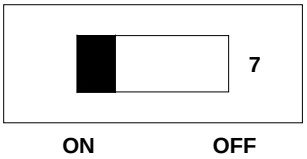

Pump Mode:

If switch 8 is OFF, pumps will be energized on a falling level. If switch 8 is ON, pumps will be energized on a rising level.

Pump UP (Start on falling level)

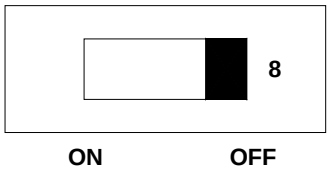

Pump DOWN (Start on rising level)

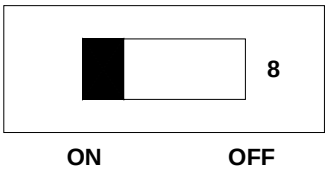

Chapter 4 Variable Speed Pumping Operational Theory

4.1 Load Sharing Drives

Learning to properly set the Vari-Gage™ with correct Minimum and Maximum speed settings is an essential part of effectively operating and sequencing your Vari-Gage™ controller.

The following sequence details how the Vari-Gage™ will control a pumping station with three pumps in a load sharing configuration. The three pumps are called Lead, Lag 1 and Lag 2.

At low wet well levels, the Lead pump operates alone and still maintains adequate flow. As the wet well level increases, the Lead pump ramps up to the pre-determined maximum speed. If the wet well level continues to increase after the Lead pump reaches maximum speed, the Lag 1 pump starts at its minimum speed and both pumps operate in parallel to share the load at the minimum speed of the Lag 1 pump. Further increase in wet well level causes the Lead and Lag 1 pumps to ramp up to their maximum speed. If the wet well level continues to increase after the Lead and Lag 1 pumps reach their maximum speed, the Lag 2 pump starts at minimum speed and all three pumps operate in parallel to share the load at the Lag 2 minimum speed. Further increase in the wet well level causes all three pumps to ramp up to their maximum speed. If the wet well level continues to rise, you will have a high level alarm condition.

On decreasing wet well levels, the sequence will reverse and the pumps will shut off in reverse starting order. Once the minimum speed of the Lag 2 pump has been reached, all three pumps will run flat at the Lag 2 pump's minimum speed until the Lag 2 Stop Pump level has been reached. The remaining two pumps (Lead and Lag 1) adjust speed and share the load according to the minimum and maximum speed settings for the Lag 1 pump. As the wet well level continues to decrease, the Lead and Lag 1 pumps reduce speed until they hit the Lag 1 minimum speed setting and run flat at the minimum speed of the Lag 1 pump until the Lag 1 Stop Pump level is reached to stop the pump. The only remaining pump (Lead) will adjust its speed according to its minimum and maximum settings. As the wet well level continues to decrease, the Lead pump reduces speed until it hits the Lead pump's minimum speed and runs flat at this speed until the Lead Stop Pump level has been reached to stop the pump.

4.2 Understanding Minimum Speed Settings for VFD Systems

Wastewater pumps are most commonly the centrifugal type meaning that the pump develops its power by the rapid spinning of its impeller. Running an impeller too slowly will waste energy and will not have any productive effect on moving water.

All pumping systems have "back-pressure" against which the pump has to push. The pump must run at sufficient speed to overcome the ever present "back pressure" that exists in all wastewater pumping stations. If the pump cannot raise sufficient pressure to overcome this back-pressure, then no water actually flows, even though the pump shaft may be turning. Under these "no flow" circumstances, the pump will be doing no useful work and all of its energy will be going into churning water. This is obviously undesirable as it will heat the water and, if not corrected, can heat the pump to dangerous levels.

Figure 4-A on page 17 illustrates the essential elements of a typical lift station pumping system.

Note that the pump,"P", is arranged to pump water from well #1 to a higher well #2. It moves that water via a pipe attached to its outlet. The pipe is arranged so that the pumped water will arrive in the new well at the discharge point "D".

Example:
If the pump is stationary, the water will be at the level of 0% shown. If the pump is started and runs at 25% speed, the water will rise to a typical level shown at 25%, but no further. If the speed of the pump is increased to 50% and then, to 70%, the water will rise higher in the pipe. The levels at 50% and 70% are also shown on the diagram. Note that for all speeds up to 70%, no water actually moves out of the discharge 'D' and no useful pumping has taken place. This activity has caused the pump to raise pressure but this pressure is only “static pressure” since the water is not moving yet.

As the pump speed is increased a small amount from 70% to 75%, the water will start to spill out of the discharge 'D'. At this point, the pump is actually doing useful work and 75% should be established as its minimum speed and programmed into the Vari-Gage™. The Vari-Gage™ will regulate the speed of the pump above this minimum speed and not below. Operating a pump below the minimum speed is not only a waste of electric power, but may actually do damage to the pump and the pump seals by overheating the unit. Pump casings have been known to crack and burst under high temperature.

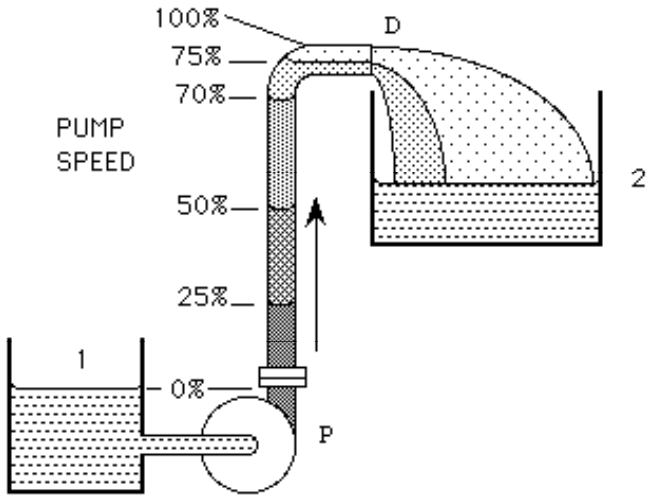

Example 4-A Example of settings created when one pump is available to run.

4.3 Determining Minimum Speed

In practice, the minimum speed can be determined several different ways, depending on the equipment available:

<u>Flowmeter Method</u>

If a flowmeter is available, then this method is preferred. It does not matter if the meter has been installed to read the flow in the outlet of each pump, or if it has been installed to read the total flow of the station. In either case, only one pump should be on at a time to make this test.
1) Determine the minimum acceptable flow which constitutes “useful pumping”. This is generally calculated to be around 10% to 20% of the maximum flow of the single pump.
2) Operate the VFD in HAND and measure the maximum flow of the particular pump at 100% speed (or at the single pump maximum speed). Be sure to allow the system to settle for a minute, especially for long pipelines. Record this value.
3) Take 10% to 20% of this value. This data will be used in determining the minimum flow.
4) Reduce the speed of the VFD by using the manual speed control until the approximate minimum flow is indicated on the flowmeter. Again, allow the system to settle before noting the speed of the pump.

5) Record the speed from the calibrated VFD speed meter. Readings from the dial of a manual speed control should not be used.

Empirical Method

If a flowmeter is not available, then actual flow must be observed and a fair estimate must be made by eye. This can be done either by positioning an assistant at the discharge of the pipe together with some means of communicating the required observations (voice, hand signals, telephone, or walkie-talkie), or positioning your assistant to observe the movement of the pressure-actuated check valve.

NOTE: At installations where the check valve is motor-actuated or hydraulically actuated, this method will not work.

The procedure requires the VFD to be run in manual while observations are made as follows:

For the discharge method:

1) Observe the flow at maximum
2) Decrease speed until about a tenth of that flow is observed, allowing time for the system to stabilize.
3) Record the control setting.

For the check valve method:
The check valve must be easily visible.

1) Use a ruler or a stick and mark where the valve counterweight sits when it is at rest (pump off or stopped).
2) Run the VFD up to full speed and after settling, mark where the counterweight sits at full flow.
3) Reduce the speed of the VFD until the counterweight is only 1/10th of the distance above the stopped pump position, approximately one inch, for example.
4) Measure and record the speed of the pump.

After using either method to get pump speed data, you must do the following to obtain your LEAD MIN SPEED that should be used in programming the Vari-Gage™:

Proceed to measure this minimum speed for all the other pumps. Make note of any pump with a minimum speed much greater than the other pumps. This may indicate a worn impeller and should be brought to the attention of the maintenance department. The larger of the recorded speeds is your LEAD MIN SPEED and the value that should be programmed into the Vari-Gage™ as the LEAD MIN SPEED.

Note: Enter the MIN SPEED setting into the Vari-Gage™ only when the MIN SPEED light on the Vari-Gage™ is blinking. This will indicate that the controller is ready to accept the data.

If one pump has recorded a much higher speed than the others, then when it is repaired or corrected, then the above procedure for finding the minimum speeds may be carried out again, and the new speed should be entered into the Vari-Gage™.

The above procedure should be repeated each year to check both the condition of the pumps and the correct setting of the Vari-Gage™.

WARNING!!! Do not set the Vari-Gage™ speeds, or manually run a pump, below its minimum speed. See Sections 4.3, 4.4 and 4.5 for an explanation of minimum speeds.

4.4 Minimum Speed For One Pump

The minimum speed is the slowest speed that the pump can run while still doing useful work to pump water. See Section 4.2 on page 15 for how to determine this speed. When you have only one pump, this method will provide the LEAD MIN SPEED to be programmed into the Vari-Gage.™

4.5 Minimum Speed For Two Pumps

This is the slowest speed at which two pumps should be run together. When you have two pumps, the Minimum speed settings for the pumps are determined differently. At lower wet well levels, the Lead pump alone will provide sufficient flow in your system. When the demand increases beyond the Maximum Speed of the Lead pump, the second pump will be needed. The Minimum Speed settings programmed in the Vari-Gage™ will need to change to reflect the pumping capabilities of two pumps. The speed chosen for this new combination of pumps should be arranged so that the total water flow of the two pumps together is slightly less than the flow obtained when the Lead pump was at its maximum speed. MIN SPEED settings for two pumps will need to be higher than the MIN SPEED setting for one pump since they will be working against their combined manifold pressure.

To determine the Minimum Speed with two pumps, conduct the following test:

1) Run a single pump at its maximum speed by turning the drive on in MANUAL. Use the MANUAL SPEED ADJUST control button or knob and turn to the Maximum setting.
2) Record the flow rate with a flowmeter, if available. If a meter is not available, record the motion of the well level up, down, or static.
3) Turn on the second drive at its maximum speed and, while keeping both speeds the same, adjust both the drive speeds down until the flow rate or the well level motion is approximately the same or less than the wet well level motion that was obtained with the single pump running at 100% (or the maximum speed setting).
4) This chosen minimum speed should be programmed into the Vari-Gage™ as the LAG 1 MIN SPEED for two pumps.

Note: Enter the MIN SPEED setting into the Vari-Gage™ only when the MIN SPEED light on the Vari-Gage™ is blinking. This will indicate that the controller is ready to accept the data.

4.6 Minimum Speed for Three Pumps

The Minimum speed setting is the slowest speed at which three pumps should be run together when two pumps have reached their maximum speed. Determining the Minimum speed for three pumps is similar to finding the speed for two pumps.

If the wet well level continues to increase after both the Lead and Lag 1 pumps have reached their maximum speed, an additional pump must be brought on line. The speed chosen for this new combination of pumps should be set so that the total water flow of the three pumps together is slightly less than the flow obtained when the Lead and Lag 1 pumps were at their maximum speed. MIN SPEED settings for three pumps will need to be higher than the MIN SPEED setting for two pumps since they will be working against their combined manifold pressure.

To determine the Minimum Speed with three pumps, conduct the following test:

1) Run two pumps at maximum speed by turning the drives on in MANUAL. Use the MANUAL SPEED ADJUST control buttons or knobs and turn up to the Maximum setting.
2) Record the flow rate with a flowmeter, if available. If a meter is not available, record the motion of the well level up, down, or static.
3) Turn on the third drive and while keeping all three speeds the same, adjust the drive speeds down until the flow rate or the well level motion is approximately the same or less than the wet well level motion that was obtained with two pumps running at 100% (or the maximum speed setting).
4) This minimum speed should be programmed into the Vari-Gage™ as the LAG 2 MIN SPEED for three pumps.

Note: Enter the MIN SPEED setting into the Vari-Gage™ only when the MIN SPEED light on the Vari-Gage™ is blinking. This will indicate that the controller is ready to accept the data.

See Figure 4-B on page 21 for further explanation of load sharing between variable speed pumps.

4.7 Maximum Speed

The maximum speed is the highest speed at which the pump or combination of pumps will run when the Vari-Gage™ is active. This value will not prevent running at higher speeds if MANUAL is selected on the front panel controls of the VFD. The maximum speed of a pump is normally 100%, but there may be some factors which limit the maximum usable speed for a particular pump. When determining the maximum speed for your system, you should consider the following:

1) Possible under-sizing of a VFD, the motor, or the electrical supply available.
2) Maximum flow from the station in relation to overloading downstream
3) Individual pump performance capabilities

Any of these limitations can make it impossible to reach the highest speed levels for the pumps. These limits should be discussed and clearly understood by all parties concerned. The maximum speed should be set at a point that will be achievable by any pump within the system.

If you have more than one pump, station capacity limits should be programmed to limit the speed of the most powerful pump or combination of pumps. You must always use the lowest maximum speed possible for any pump, VFD or motor within the station. This speed should be programmed into the MAX Speed Settings for each Lead, Lag 1 & Lag 2 settings of the Vari-Gage™.

Note: Enter the MAX SPEED setting into the Vari-Gage™ only when the MAX SPEED light on the Vari-Gage™ is blinking. This will indicate that the controller is ready to accept the data.

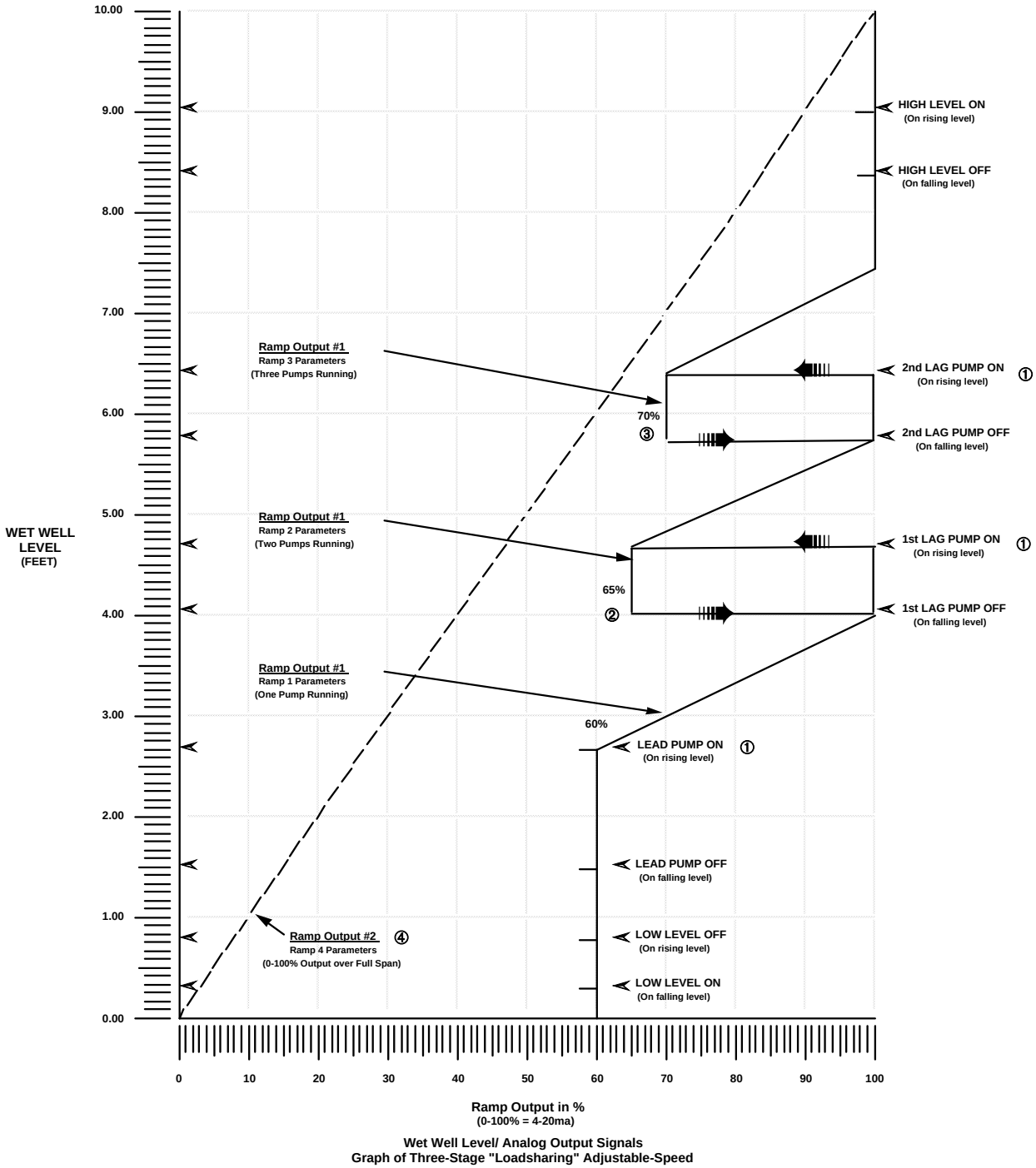

Wet Well Level/ Analog Output Signals
Graph of Three-Stage "Loadsharing" Adjustable-Speed

① Pump start setpoints are set at a speed which is high enough to ensure check valve opening and good initial flow.

② Minimum speed is chosen such that two pumps, when running at the same speed, continue to effectively pump yet deliver LESS THAN a single pump which is operating at full speed. (This inhibits erratic ON/OFF operation caused by dead spots.)

③ Minimum speed is chosen such that three pumps, when running at the same speed, continue to effectively pump yet deliver LESS THAN two pumps which are operating at full speed.

④ The fourth ramp parameter set shown, drives the second analog output. In this example, the fourth ramp parameter set is simply a follower which increases/ decreases in conjunction with excursions in the wet well.

Figure 4-B Example of settings created when 3 pumps are available to run.

4.8 Speed Level Settings (Minimum and Maximum)

The Minimum Speed Level is the Level in the wet well at which the drive is called to start the Lead, Lag 1 and Lag 2 pumps at the pre-determined Minimum speed.

Example with one pump available to run and these settings:

Minimum Speed Level:	Set at 2 feet	**Maximum Speed Level**:	Set at 4 feet
Minimum Speed % :	Set for 60%	**Maximum Speed %**:	Set for 100%

The following sequence will occur:

The wet well level reaches 3 feet.
The controller will call for the drive to run the pump motor at 80% speed.
Since the MIN speed level is 2 feet at 60% and the MAX speed level is 4 feet at 100%, the midpoint is 3 feet at 80% (halfway between 60% and 100%).
The Vari-Gage™ controller makes the decision to ramp the analog output signal linearly so that the 3' Start Pump level causes the controller to start the drive at 80%.

The Maximum Speed Level is the level in the wet well where the drive is called to run at the Lead, Lag 1 and Lag 2 pump's pre-determined Maximum speed. This speed is normally set at 100% for all drives.

4.9 Creating Your Settings:

The following settings are user selectable and can be changed or reset ONLY in the appropriate Mode:

PROGram Mode	Set Pump Start Levels for the Lead, Lag 1 and Lag 2. Levels where pumps start and drives engage.
	Set Pump Stop Levels for the Lead, Lag 1 and Lag 2. Levels where pumps start and drives engage.
	Set MAX Speed Levels for the Lead, Lag 1 and Lag 2. Levels at which Drives reach MAX Speed.
	Set MIN Speed Levels for the Lead, Lag 1 and Lag 2. Levels at which Drives start at MIN Speed.
	Set MAX Speed Percentages for the Lead, Lag 1 and Lag 2. Set when the MAX Speed Light on the Vari-Gage™ is blinking.
	Set MIN Speed Percentages for the Lead, Lag 1 and Lag 2. Set when the MIN Speed Light on the Vari-Gage™ is blinking.

Figure 4-C Overview of all user selectable settings

Level Setpoints

Pump Start and Stop settings are the levels at which the controller will take action and call for the contactor to either close and engage the drive to the motor or open and disengage the drive from the motor.

Example:

Pump	Pump Start	Pump Stop	MIN Speed Level	MAX Speed Level	MIN Speed %	MAX Speed %
Lead	2.7 feet	1.5 feet	2.7 feet	4 feet	60%	100%
Lag 1	4.7 feet	4.0 feet	4.7 feet	5.7 feet	65%	100%
Lag 2	6.4 feet	5.7 feet	6.4 feet	7.4 feet	70%	100%

Figure 4-D Level Setpoint Example

Note: These settings are shown on the graph in Figure 4-B on page 21.

4.10 Using Drives Independently

The Vari-Gage™ can also be used to control drives independently for different applications. In this case, we recommend that you consult the Variable Frequency Division at the factory for assistance in determining the best way to configure your system to achieve your desired results.

Chapter 5 Calibration

5.1 Calibration Mode Overview

All Vari-Gage™ units are shipped from the factory pre-calibrated for either pressure, voltage or current input based on the panel requirements. Please do not move jumpers or re-calibrate without reading the following and fully understanding the calibration settings. Damage to the Vari-Gage™ may result if jumpers are moved without properly re-calibrating the unit.

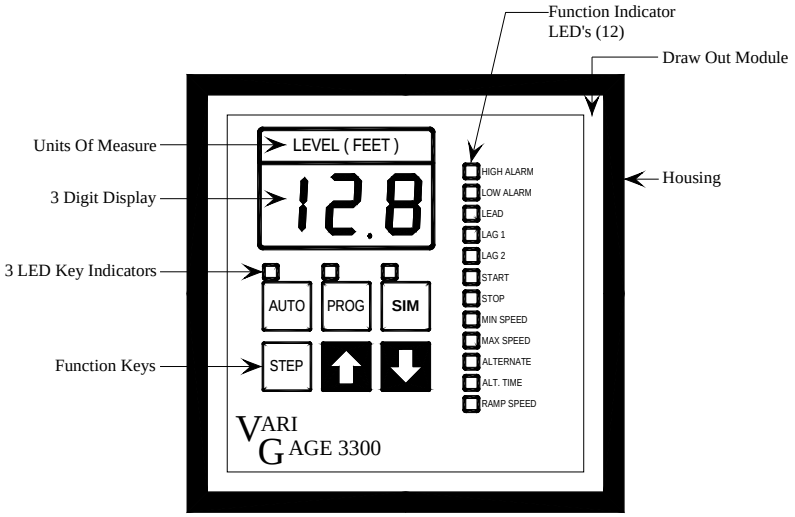

These settings are the ONLY settings that can be changed while in the Calibrate Mode:	1. Decimal Point Location can be either 000, 00.0, 0.00 or 000. 2. High digital value of high analog input signal. 3. Low digital value of low analog input signal

The function keys are used, as follows:

AUTO Key is pressed to enter new calibration values once selected.

PROG Key takes a "Snapshot" of the internal 14 bit (0 To 16,383) raw value of the analog signal applied to the Vari-Gage during calibration of high and low setpoints.

SIM Key is used when changes have been made in error and should be discarded. Press SIM then AUTO to discard changes and revert to previous stored data.

STEP Key is pressed to select high and low calibration Points.

Arrow keys set values for the digital readout for high and low analog input calibration signal and the decimal point position.

"Taking a snapshot" occurs when the PROGram Key is pressed. This means that the raw data 14-bit number between 0 and 16,383 has been temporarily memorized by the unit. This setting is not fully implemented and used by the Vari-Gage until the calibration procedure is complete and the AUTO Key is pressed.

5.2 Calibration Procedure

Once you have determined the type of input to be used with your Vari-Gage (i.e. 0-35 feet of level; 0 - 10 VDC or 4 - 20mA DC), remove the draw -out module from the housing. Turn the unit around to find the three input pin locations labeled W1, W2 and W3 on the rear PC board (see Figure 3-A on page 11). Place the blue jumper over the jumper pin location corresponding to the type of input you have selected for your system.

If you are not using a bubbler input, you will require an external input signal from a signal generator for (W - 1) 4 - 20mA DC input OR (W - 3) 0 - 10VDC input. It is essential that you have a reference input signal to be able to calibrate your controller.

The external input signals (either 4 - 20mA DC or 0 - 10VDC) are wired to the F(+) and F(-) input terminals on the rear of the Vari-Gage housing. It is important that you maintain the proper polarities when wiring to the input terminals. See Figure 5-A.

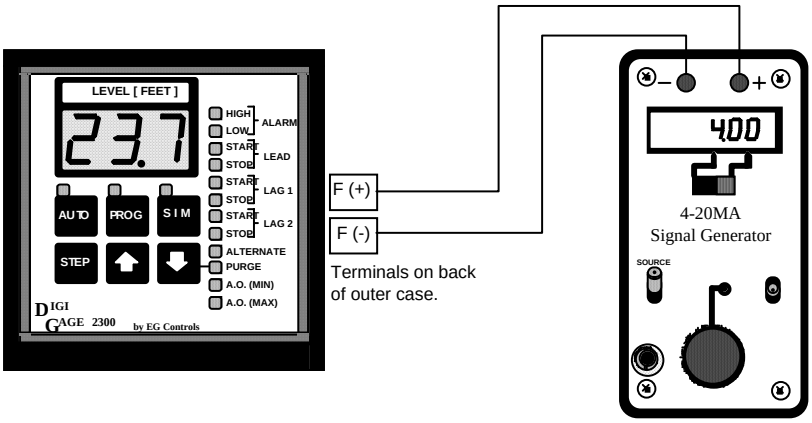

Vari-Gage 3300

Figure 5-A Calibration Set-up for use with 4-20mA DC Signal Generator

When you have selected the proper signal generator for your referenced input and have wired your input to the F(+) and F(-) terminals on the back of the Vari-Gage housing, you are ready to calibrate the controller.

The Calibrate mode is entered by pressing and holding the PROGram Key and then pressing the STEP Key. All three (3) LED Key Indicators will start flashing. The Decimal Point flashes (if displayed), indicating that it can be moved at this point. You may now use your Arrow Keys to adjust the decimal point to achieve the desired resolution as follows:

Based on a standard 0 - 10 foot control range, the resolution options are:

1) 0.00 - 9.99 feet in hundredths
2) 00.0 - 10.0 feet in tenths
3) 0 - 120 inches in inches

If you increase the full range to more than 10 feet, you will not be able to use option #1 above to set the control range in hundredths. You will, however, be able to create setpoints from 0 - 999 using whole numbers.

To enter changes, press the AUTO Key. To discard changes, press the SIM Key, and then the AUTO Key.

Basic Calibration Process for standard 0 - 10 foot range, regardless of input:

Note: While either the HIGH or LOW point may be done first , the HIGH point is easier and is the method used in the examples in this manual.

If your HIGH Level setting is for 10 feet, you would first use your Arrow Keys to scroll to a numeric setting of 10.0 feet on your digital readout. If you are using a 4 - 20mA DC input you would vary your input signal on your signal generator to 20mA DC. You now have your numeric setting at 10 feet and your referenced signal input is 20mA DC. You would "take a snapshot" by pressing the PROGram Key.

Conversely, if your LOW Level desired setting is 0.0 feet, you would first use your Arrow Keys to scroll down to a numeric setting of 0.0 feet on your digital readout. You would then vary your referenced input signal down to 4mA DC. Your LOW Level numeric setting is 0.0 feet and your reference input signal is 4mA DC. You would again "take a snapshot" by pressing the PROGram Key. The correlation then becomes 4mA DC = 0.0 and 20mA DC = 10.0 feet in a 0.0 to 10.0 foot control range.

In the calibrate mode, set the pump(Lead, Lag 1 or Lag 2) and MIN SPEED settings to 0%. Set the pump and MAX SPEED to 100%. See steps 10 through 13 in example "B" for a 4-20mA input.

IMPORTANT!! Once you have completed your settings, press AUTO to enter the data into EEPROM.

When creating these setpoints, it is important to use widely-separated points and to physically measure the level (or pressure) being sensed. This measurement may be done with any measuring tool.
For example, if using a bubbler input, you could use one of the following:

1) A regulated air supply and a precision pressure indicator
2) A sump with a measuring tape

Calibration Process by type of input

Examples A and B below cover the steps needed to calibrate both a Vari-Gage™ system with bubbler input (Example A) and a Vari-Gage™ system with 4 - 20mA DC input (Example B). Calibrating a system with 0 - 10VDC input is similar to the process used in Example B.

Example A: In this example, we will use an air pressure transducer to measure the level in a sump. The same basic steps apply to any system:

1) Attach the bubbler air sensor tube into the pneumatic port at the back of the unit.
2) Place the unit into Calibrate mode by pressing and holding the PROGram Key and then pressing the STEP Key. The three (3) LED Key Indicators will blink.
3) Set the Decimal Point position to the desired digit. The UP arrow moves it to the left, and the DOWN arrow moves it to the right. Decimal point options are: 0.00-9.99, 00.0-99.9 or 0-999.
4) Press the STEP Key. The HIGH ALARM LED will light, indicating the HIGH Calibration point.
5) Adjust the displayed value to match the actual level above the end of the bubbler tube using the UP and DOWN arrows. Note that this value cannot be decreased below the low calibrated value.
6) When the displayed and actual measured values match, press the PROGram Key. This reads the raw input value and associates it with the number you just set in the 3 digit display. You may repeat steps 5 and 6 as many times as required.

7) Press the STEP Key. The LOW ALARM LED will light, indicating the LOW Calibration point.
8) Remove the air tube from the unit.
9) Using the UP and DOWN arrows, set the displayed value to 0.0.
10) Press the PROGram Key to "take a snapshot" of the input.
11) Press the AUTO Key to accept these settings. If you wish to discard these changes, press the SIM Key, then the AUTO Key.

Example B: In this example, we will use an external 4 - 20mA DC input signal to measure the level in a sump. The same basic steps would apply to a 0 - 10 volt external signal. Be sure that the input jumper is set to the (W1) position.

1) For 4 - 20mA DC , use terminal F(+) and terminal F(-) to attach your signal generator.
2) Place the unit into Calibrate mode by pressing the PROGram Key and pressing the STEP Key while still holding the PROGram Key. The three (3) LED Key Indicators will blink.
3) Set the Decimal Point position to the desired digit location. The UP arrow moves it to the left, and the DOWN arrow moves it to the right. Decimal point options are: 0.00-9.99, 00.0-99.9 or 0-999.
4) Press the STEP Key. The HIGH ALARM LED will light, indicating the HIGH Calibration point. Example: The maximum value could be 10.0 ft, 999 ft, 50.0 PSI or 240 inches of water.
5) Adjust the display to the desired maximum value desired to match the 20mA input signal using the UP and DOWN arrows. Note that this value cannot be decreased below the low calibration value.
6) When the displayed and 20mA values match, press the PROGram Key. This reads the raw input value and associates it with the number you just set. You may repeat steps 5 and 6 as many times as required.
7) Press the STEP Key. The LOW ALARM LED will light, indicating the LOW Calibration point. Example: Minimum value could be 0 feet.
8) Adjust the display to the minimum value desired to match the 4mA DC input signal using the UP and DOWN arrow. Note that this value cannot be increased above the high calibration value.
9) Press the PROGram Key to "take a snapshot" of the input.
10) Press the STEP Key. The LEAD and MIN SPEED LED's will light. Adjust the displayed value to 0%.
11) Repeat Step 10 for the Lag 1 and Lag 2 pumps.
12) Press the STEP Key. The LEAD and MAX SPEED LED's will light -- indicating the maximum percentage of the 4-20mADC input signal span (16mADC) or the maximum setting for the Vari-Gage. Adjust the displayed value to 100%.
    For example: If set to 60%, the Vari-Gage will be set to receive or read a maximum input signal of 13.60mADC [(16mA x .60) + 4mA = 13.60 mA]. The Vari-Gage will not reach its maximum speed at 20mADC if using the full range of the 4-20mA input signal.
13) Repeat Step 12 for the Lag 1 and Lag 2 pumps.
14) Press the AUTO Key to accept these settings. If you wish to discard these changes press the SIM Key, then the AUTO Key.)

NOTE: If the display reads E06 after this operation, the input was not changed between calibration points (step 7), or an attempt was made to reverse the two points (High point sump level less than Low point sump level). If this error is displayed, all changes just made have been automatically discarded and you will need to start your full input calibration procedure from the beginning.

Chapter 6 Programming

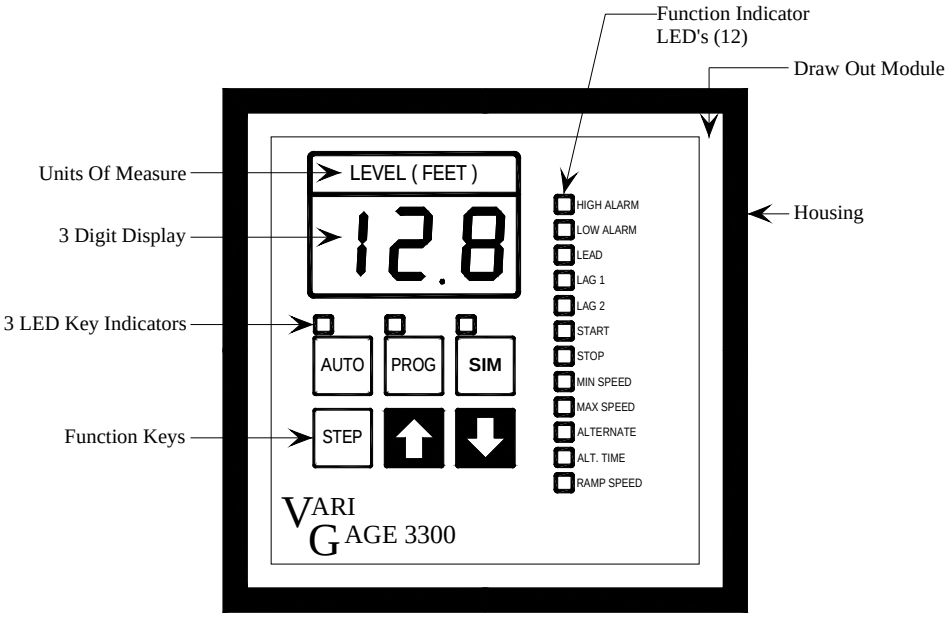

The function keys are used as follows:

AUTO Key is pressed to return to normal operating mode (AUTO) after making programming changes or testing in SIM Mode. The unit is in AUTO mode when the LED is lit.

PROG Key is pressed to program new level settings, to select MIN and MAX speed settings for the drives, to select ALTERNATE Mode for Manual or Automatic alternation, and to set minimum and maximum Analog Output (A.O.) level settings. The unit is in PROG mode when the LED is lit.

SIM Key is pressed to perform system testing. The Arrow keys are used to simulate rising and falling values and the Vari-Gage outputs (alarms, pumps and AO) will respond to any changes. The unit is in SIM mode when the LED is lit.

STEP Key is pressed to view the current setpoints and make changes. Step through all 12 LED's to view different setpoints and make the needed changes. Note that changes can only be made while in PROGram mode. The current value of each setpoint is displayed in the Digital Display.

Arrow Keys are used to change digital setpoint values in PROGram Mode and to simulate increasing and decreasing digital values while in SIMulate Mode.

6.1 Programming the Vari-Gage™

To program the Vari-Gage™ 3300, follow these steps:

1) Press PROGram key. The LED above the key will illuminate.
2) Press the STEP key, the HIGH LEVEL LED will illuminate and the current value stored for the high level alarm will be displayed.
3) Use the UP or DOWN arrows to change the value to the desired setpoint.
4) Once the set point is correct, press the STEP key to proceed to the next set point.
5) The LOW LEVEL LED will now illuminate and the current value for low level alarm will be displayed.
6) Use the UP or DOWN arrows to alter the setpoint if desired.
7) Repeat this process for each setpoint. When a large change is being programmed, holding the STEP key and the UP or DOWN keys simultaneously will change the displayed values more rapidly.

The following setpoints are set in the PROGram Mode:

Setpoints needed for each pump:

1) Pump Start setpoints
2) Pump Stop setpoints
3) Minimum (MIN) speed level setpoints
4) Maximum (MAX) speed level setpoints
5) Minimum (MIN) speed for drive (light blinking)
6) Maximum (MAX) speed for drive(light blinking)

Setpoints needed for pumping system

1) Alternation Choices
2) Alternation Time
3) Ramp Rate

IMPORTANT: Please note that the MIN and MAX Speed Settings are used to set both the MIN and MAX speed levels, and the MIN and MAX speed percentage. When programming the MIN and MAX speed levels, the MIN Speed indicator light will come on first and stay on until the MIN speed has been set. The MAX Speed indicator light will illuminate next and stay on until the MAX speed has been set. When programming the MIN and MAX speed percentage, the MIN and MAX speed lights will come on and blink while the setpoints are being created.

PUMP START/STOP SETPOINTS:

The START and STOP setpoints will control the discrete contact output associated with the analog outputs. The discrete contact output is the level you have chosen for the VFD to start the motor and share the load or to start the motor and run independently. Please refer to the Option Configuration section on page 12 for the description of VFD Mode switch #7 for more information on configuring your VFD's.

The association is, as follows:

Discrete Output	Analog Output
Lead	P-1 Analog Out
Lag 1	P-2 Analog Out
Lag 2	P-3 Analog Out

SPEED SETPOINTS:

Minimum and Maximum speed settings are the levels at which the VFD will receive a 4-20mA DC speed signal from the controller. This signal will call for the drives to run at the pre-selected speeds set in the PROGram Mode.

These Minimum and Maximum Speed Settings are stated as a percentage of MAX speed and relate proportionately to the 4-20mA DC output signal to the drive. For example, a speed setting of 0% = 4mA DC,

25% = 8mA DC, 50% = 12mA DC, and 100% = 20mA DC. When these speed settings are set, they will dictate the MIN speed when the drive will start and the MAX speed that the drive can reach.

Important key points to remember when programming your Vari-Gage™...

1) The start or stop setpoints for Lead, Lag 1 and Lag 2 are the levels at which the discrete contact outputs are controlled and where the motors are actually engaged or disengaged into or out of the system.
2) The MIN and MAX speed levels are set up in the PROGram Mode.
   A)The MIN speed levels set for the Lead, Lag 1 and Lag 2 determine where the MIN speed signal will be sent to the drives. Reaching the level will generate the 4-20mA DC signal to turn on the drives at the pre-selected minimum speed percentage.
   B)The MAX speed levels set for the Lead, Lag 1 and Lag 2 determine where the MAX speed signal will be sent to the drives. Reaching the level will generate the 4-20mA DC signal to speed up the drives to the pre-selected maximum speed percentage.
3) The MIN and MAX speed percentages are set up in the PROGram Mode. The LED on the front panel of the Vari-Gage next to MIN or MAX SPEED will be blinking. The speed percentages chosen will select the proper 4-20mA DC signal to run the drives at the specified percentage called for.

ALTERNATION:

When PUMP ALT is selected, either an “ALO”, “AFO”, “1”, “2” or “3” will be displayed:

Automatic Alternation Choices:	**Manual Alternation Choices:**
“ALO” : Last on, First off	P-1: Pump Sequence is 1-2-3
“AFO” : First on, First off	P-2: Pump Sequence is 2-3-1
	P-3: Pump Sequence is 3-1-2

If “P-1” is selected on the display, the sequence of pumps will always be 1-2-3. If “P-2” is selected, the sequence will be 2-3-1, etc. Note: If only 2 pumps are allowed to alternate (see Option Configuration Section 3.2 on page 12 for the number of pumps to alternate), then only “ALO”, “AFO”, “1” or “2” will be displayed. In this case, the third (“Standby”) pump can still be programmed and will operate independently of the alternation scheme. When the selected alternation calls for a new Lead pump during normal operation in the AUTO mode, the Alternate LED flashes briefly to confirm the action.

ALTERNATION TIME: (Applies only to ALO, not AFO)

Set alternation time from 1 hour up to 168 hours, if desired. When programming is complete, press the AUTO key to permanently store the operating program in EEPROM memory. Programming changes may be discarded by pressing the SIM Key first, then the AUTO key.

RAMP RATE:

When programming RAMP rate, the Vari-Gage™ will display a numeric value,which relates inversely to the maximum acceleration or deceleration. The Vari-Gage™ will allow for analog outputs. To decelerate, increase the numeric value of this register; to accelerate, decrease the numeric value of this register.

Example:

RAMP Setting	Approximate Rate of Change
1	20% /sec
20	1%/sec

6.2 Exiting the PROGRAM mode

After all the setpoints have been programmed, exit the PROGram mode by pressing the AUTO Key. The LED above the Key will illuminate, and the LEVEL display will show the current values. To test your program, enter the simulate mode by pressing the SIM key and use the UP and DOWN Arrows to simulate a rising and falling level or pressure.

Chapter 7 Installation

7.1 Mounting

The Vari-Gage™ is enclosed in a NEMA1 case which mounts in a panel cutout and is clamped in place by upper and lower mounting brackets.

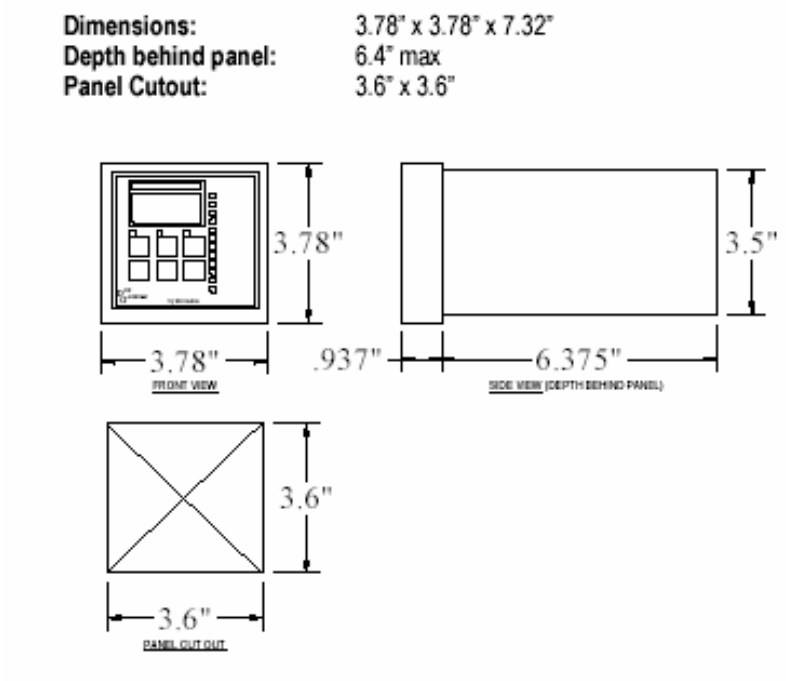

7-A Physical Dimensions of the Vari-Gage™ 3300

The molded terminals at the rear of the Controller accept #6 spade or ring terminals. For electrical connections, refer to the terminal block layout in Figure 7-B on page 33.

Your Controller is provided with relay contact outputs rated for 1.0 Amperes @ 120 VAC. For terminal connections, see diagram on the back of the housing for the Vari-Gage 3300 housing.

The Analog Output is able to source 4-20 mA DC into 600 ohms maximum. For terminal connections, see Figure 7-B on the following page for a full wiring diagram.

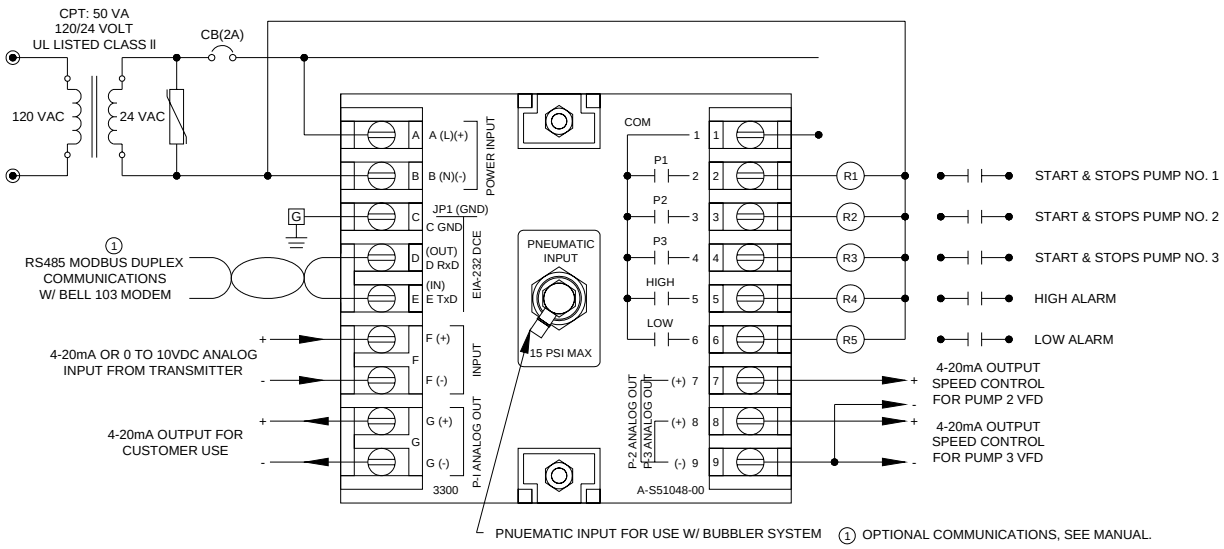

7-B Typical Wiring Diagram for the Vari-Gage™ 3300

Specifications:

Input Power: 24 VAC, 8.5 VA, 350mA

Environment: Ambient temperature (-10°C to 70°C)

Display Range:

Keypad selectable, 0-999, 0-99.9, 0-9.99, 0-.999)

Resolution: 0.006%, 14 bit A/D

Input Options:

4-20mA (50Ω impedance)

0-10VDC (>150KΩ impedance)

0-15 PSI (clean, dry air only)

Memory:

NOVRAM EEPROM 100 Year Memory, no batteries needed

Display: .5" high, 7 segment red LED, 3 digit

Discrete Outputs:

7 contacts, SPST, 1A@120VAC; 3 pumps, 2 alarms (high and low); 2 bubbler controls (isolate and purge)

Analog Output: 4-20mA (600Ω load max)

Linearity: +/- .005% analog output; +/-0.1% pneumatic input

7.2 Analog Inputs

The Analog Input terminals accept either 4 - 20mA DC or 0 - 10VDC inputs from external sources or 0 - 35 feet of level from the internal pressure port on the back of the Vari-Gage™. The operator must select the input to be used by setting a jumper on the rear PC board inside the case. Please review Input Configuration Section 3.1, page 11 for additional information. Be sure to observe the proper polarity when connecting to the F(+) and F(-) analog input terminals. *Note: It is essential that you follow the proper calibration procedure for the input you have selected. Please review Calibration Procedure Section 5.2 starting on page 26 for additional calibration information.*

The auxiliary input on Terminals D and E is designed to accept a dry contact closure. The unit is shipped with a jumper in place on these terminals. The removal of this jumper will deny access into the PROGram or calibrate modes.

7.3 Communication

All Vari-Gage models have a standard communications port for accepting MODBUS communications. Modbus protocol settings must be created before the Vari-Gage can send or receive data. The Vari-Gage will be preset at the factory with the communications option turned off. The following instructions are only needed if you should need to make changes in the RTU configuration.

The RTU setup mode is entered by pressing the PROG and Down-arrow keys simultaneously. After you have entered the RTU setup mode, you should be aware that the LED's serve a different purpose while in the RTU configuration mode. The following chart shows how the LED's are redefined:

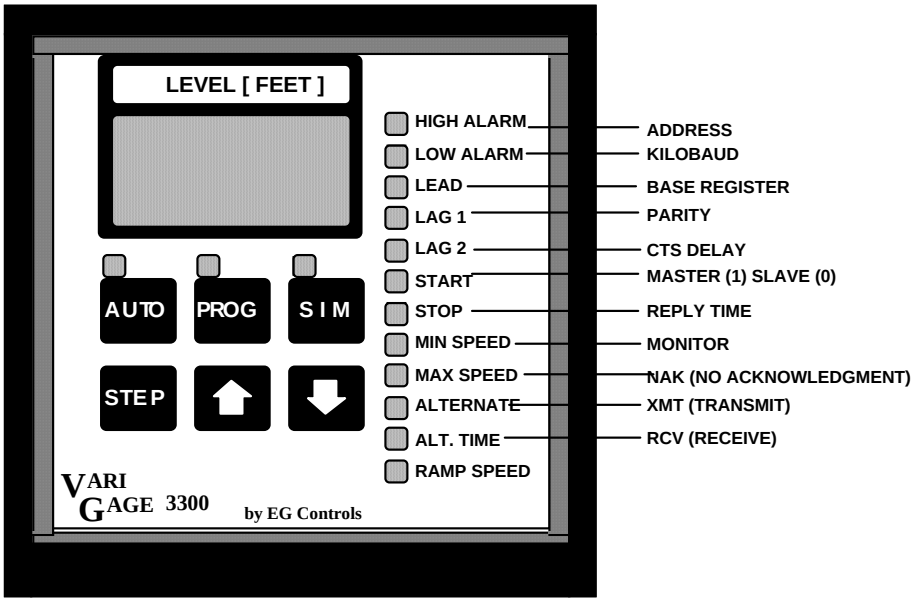

The functions are, from top to bottom, *RTU address, kilobaud, Base Register, Stop/Parity* (1e, 1o,1n, 2n*), CTS delay, Master/slave, and Reply Timeout.* Below these functions, a *Monitor* LED indicates a communications parameter is being monitored, and *NAK,XMT*, and *RCV* LEDs indicate those events in real time. Press the STEP key to move throughout these functions.

To disable the RTU operation, select an address of zero (0), the display will show OFF and no other configuration steps will be available.

The three lowest LEDs continuously display transmit and receive status, with the NAK(no acknowledgment) LED blinking whenever a NAK is sent or received.

NOTE: *Change to Address, Kilobaud, Base Register, Parity, and Master/slave mode do not take effect until the AUTO key is pressed and those changes are saved and the serial port is reinitialized.*

To implement MODBUS protocol settings:
The unit is programmable from the front panel. These set serial channel parameters (baud rate, parity), unit address, and register block base address.

Parameter	Fixed or Selectable	Displays the following
Protocol	Fixed	MODBUS RTU
Mode	Selectable	Master (1) or Slave (0)
Bit Rate	Selectable	.3, 1.2, 2.4, 4.8, 9.6 or 19.2 Baud Rate
Parity	Selectable	Even, Odd or None
Word Structure	Fixed	8 databits, 1 or 2 stop bits, parity
Unit Address	Selectable	1 - 255, disable
Base Register	Selectable	400001 - 465401 in 100 register steps

Unit Address: This refers to the Vari-Gage's own Slave address or the address of the attached Slave.

Base Register: The first register number in a block of ninety-nine (99) register numbers reserved to store data being written to and/or read from the Vari-Gage. For example, selecting 3 as the Base Register uses the registers 40301-40399 (40031-400399). The Vari-Gage supports both five and six digit register addresses. The register assignments within the block are fixed and contain raw and scaled analog values, setpoints and packed bitmaps of I/O status.

Mode: The unit can operate as a MODBUS Slave or a Master. In the Master mode, it emulates the operation of a slave. See page 36 for more information.

Important! In either mode, lack of received data on the serial port for four minutes results in re-initializing the serial port, in case the port was somehow disabled. An error message of E09 is a communications error. See section 8.1 for more information.

Modbus Master or Slave Operation

Master	Slave
When operating as a Master, the slave's setpoint registers in the selected block are read continuously, while the process data are written continuously. Master-mode setpoint changes are made either from the Vari-Gage panel and are written to the slave or from the values read from the slave. At startup, the Master writes its entire block of registers to the slave. This ensures that the setpoint data in both units are synchronized. After a successful first write, the unit starts alternately writing the Read-only registers and reading the Read-write registers. When the Master is in PROGram mode, all registers are written continuously, locking out and possibly overwriting any setpoint changes made in the slave. This protects the operator's direct setpoint entries until the unit is returned to AUTO mode. Before a setpoint change is accepted, it is checked for absolute range, then compared to whatever other setpoints it is related to (ie, lead start level vs. lead stop level, taking the pump-in/pump-out selection into account). Setpoint changes that might result in erratic unit operation are discarded, but acceptable changes within the same message are kept. If a correction was made, all registers are written back to the slave. Master Mode uses message types 3 (read HR), 6(write one HR), and 16 (write mult HR).	When operating as a slave, all valid read and write requests are honored. A request is considered to be invalid if: • It falls outside the selected register block for the unit (a NAK will be generated) • It is requesting to write to a read only register (the write will be ignored) • It is not a message of type 3 (read HR), 4 (read IR), 6 (write one HR), or 16 (write mulitple HR). In this case, a NAK will be generated. Read requests to 3xxxxx registers (message type 4) are aliased to the corresponding 4xxxxx registers (message type 3). Before a setpoint change is accepted, it is checked for absolute range, then compared to whatever other setpoints it is related to (ie, lead start level vs. lead stop level, taking he pump-in /pump -out selection into account). Setpoints changes that might result in erratic unit operation are discarded.

7.3 Extended Monitoring Module

If your Vari-Gage™ system is equipped with Scada Express and an Extended Monitoring Module, there is a PLC which is polled by the Vari-Gage™ on one port, and the SCADA system on another. When the SCADA system wishes to write a setpoint, the new value is simply written to the PLC and the Vari-Gage detects the change.

7.4 Optional Bargraph

The Vari-Gage™ can be equipped with a digital bargraph for a visual display of the levels being monitored. The bargraph unit is an analog input solid state bargraph that is mounted directly on the front panel of the Vari-Gage. The model used within the Vari-Gage™ features a 5" scale with 51 segments. The bargraph displays the same settings indicated on the digital readout and requires no separate set up procedures or adjustment.

7.5 Pneumatic Connection

Your controller is equipped with an integral pressure transducer and a 1/4" pneumatic fitting at the rear of the unit. The fitting is supplied with a ferruless sleeve which can be used with 1/4" O.D. Flex Tubing. Only clean dry air should be applied to this connection. Maximum working pressure should not exceed 15.12 PSI or 35 feet of water pressure. Proof pressure is 30 PSI.

Chapter 8 Troubleshooting

8.1 Error Codes

The Vari-Gage is able to perform self-diagnostic tests and report the results on its display in the form of error codes.

Code	Meaning
E01	There has been a checksum error reading the EEPROM where the setpoints and calibration are stored. A setpoint or the calibration may be incorrect. Unit is placed directly into PROGram mode so that user may check, correct if necessary, and save (by pressing the AUTO Key). This error inhibits all pump operation. Pressing the AUTO Key clears this error condition.
E02	The unit's RAM has failed its power-up test. Return unit to the factory for repair. This error inhibits all pump operation.
E03	The Analog to Digital converter has failed. Return unit to the factory for repair. This error inhibits all pump operation.
E04	The EPROM failed its power-up checksum test. Return unit to the factory for repair. This error inhibits all pump operation.
E06	Calibration error: the high point is not greater than the low point or the input was not changed before calibrating the second point. All changes have been discarded, so try again. This code appears on units when they are first manufactured, before initialization.
E07	DIP switches 1-3 are set incorrectly, to alternate more pumps than this unit can control. Maximum number of pumps for this model has already been reached.
E09	Trouble with communications. This interpretation varies slightly depending on whether Master or Slave operation is in use. If the unit is a Master, either eight consecutive polls have failed or a NAK response has been received from the slave. If the unit is a Slave, either a NAK response was sent to the Master or port inactivity timeout has expired (the Master has failed).

Chapter 9 Statement of Warranty

EG Controls, Inc. warrants its equipment and all parts thereof (in the aggregate "equipment") to be free from defects in material and workmanship under normal use and service when properly applied, installed and maintained. EG Controls' obligation under this warranty is limited to repair or replacement of defective components, as EG Controls deems appropriate, FOB Factory, Jacksonville, Florida. All other warranties, express or implied, are disclaimed and denied.

EG Controls' maximum liability under this warranty shall never exceed the cost of the subject product and EG Controls reserves the right, at its sole discretion, to refund the purchase price in lieu of repair or replacement. EG Controls shall in no case be liable under this warranty for consequential damages of any kind including but not limited to loss of time, inconvenience, lost profit, labor charges, or other incidental or consequential damages with respect to persons, business, or property.

This warranty applies with respect to commercial classes of equipment. We warrant this equipment for a period of time, such warranty commencing from the date of shipment as described below:

PRODUCT	**WARRANTY**
Vari-Gage Control Systems	1 year
Parts Ordered as Separate Components	3 months

This warranty does not apply if the product has been subjected to improper storage, misuse, neglect, unauthorized alteration, improper installation, accidental damages (including "acts of God" such as lightning or other natural disasters), faulty repair efforts, or transit damage. Similarly, this warranty does not apply to products or parts in instances where adjustments thereof will correct the alleged defect and does not cover expendable items such as light bulbs and fuses.

EG Controls will not assume responsibility or accept invoices for unauthorized repairs to its control equipment. Nor will it be responsible for damage to its control equipment through attempts to operate the equipment beyond its rated capacity, intentional or otherwise.

EG Controls expressly disclaims any warranty of merchantability or fitness for a particular use or purpose with respect to the goods sold.

EG Controls neither assumes nor authorizes any other person, company, or other entity to assume on its behalf any other warranties or liabilities in connection with EG Controls' systems.

This warranty can be modified only by an officer of EG Controls and then only by a signed, written statement specifically describing and setting out any modifications.

Appendix

A. Implementation of a Third Party Scada System

If you purchase a Vari-Gage with a Scada Express control system, no additional set up will be required. If you purchase a Vari-Gage and wish to connect the system to a third party Scada system, the following information will be important.

IMPORTANT!! Please note that detailed knowledge of Modbus protocol is required.

Pump Elapsed-Time-Meter and Start-Count registers have been added. The ETMs can be scaled to resolutions of 0.1, 0.2, 0.5, and 1 hour per count, allowing ranges of 6553.5, 13107, 32765.5, and 65535 hours, respectively. The Start Counter range is fixed at 0-65535 starts. All ETMs and Start Counters overflow by rolling back over to zero.

Pump statistics can be reset by setting the Command Enable bit (0x8000) in the Command Word (4xxx56) and toggling the appropriate bit for that pump's data (0x0004-0x0080 for pumps 1-6).

The new register assignments are

4xxx57-4xxx58 (2 reserved)
4xxx59-4xxx64 Pump (1-6) Start Count
4xxx73-4xxx78 Pump (1-6) ETM (0.1, 0.2, 0.5 or 1.0 hours/count)
4xxx79-4xxx80 (2 reserved)
4xxx98 Seconds since key hit (0-65535, for SCADA watchdog), moved from
4xxx64.

The AO1-AO4 Min and Max (4xxx73-4xxx80) register functions have been deleted, and the register addresses reassigned as noted above.

Unit Factory Initialization is now accomplished by holding the four corner keys (**AUTO+SIM+STEP+DOWN**) and applying power (sliding the unit into its case, for example).

To select the upper half of the options set in the Factory DIP-switch initialization, turn S8 ON. This shifts the other seven switches to a new set of functions. Setting the ETM scale is accomplished by setting the switches according to the table below, then applying the power to the unit while holding the **AUTO+SIM+UP** keys:

SCALE	SWITCH COMBINATION
0.1 HR	S8 on
0.2	S1+S8 on
0.5	S2+S8 on
1.0	S1+S2+S8 on

The TTY-mode has been updated to set ETM scaling. The new selections are * H ETMs-.1 hr. * I ETMs- .2hr *J ETMs .5hr *K ETMs 1 hr

Upon updating an existing unit, the Display will show E.01. This is normal, as the NVRAM contents have been changed to make room for stored pump statistics. If you see this error message, however, please be aware that the the Lead-Lag Max VFD speeds (PROG-mode with LED's blinking) will have been changed to 0 and will need to be reset to 100% or their previous settings. All other setpoint and calibration data will still be intact. Failure to take the reset step will result in all drives running at minimum speed.

Internal Register Format

4xxx01(r/o;v)	Process Variable Display
4xxx02(r/o;nv)	Decimal Point position (0.3, 0=blanked, 1=xxx, 2=xx.x, 3=x.xx)
4xxx03(r/o;v)	Raw A/D Input Word (0-16383)
4xxx04(r/o;v)	Relay Output and Limit Alarms bitmaps
4xxx05(r/o;v)	Current Lead Pump Number (1 to n)
4xxx06(r/o)	Logical / physical pump required bitmap
4xxx07(r/o;v)	Last Error Number (0-9)
4xxx08(r/o;v)	Operating Mode
4xxx09-4xxx16(r/w;nv)	Lead Lag (1-8) Pump Start Setpoint (0-999)
4xxx17-4xxx24(r/w;nv)	Lead Lag (1-8) Pump Stop Setpoint (0-999)
4xxx25 (r/w;nv)	High Alarm Setpoint (0-999)
4xxx26 (r/w;nv)	Low Alarm Setpoint (0-999)
4xxx27-4xxx30 (r/w;nv)	Lead Lag (1-4) VFD Max. Speed Level (0-999)
4xxx31-4xxx34 (r/w;nv)	Lead Lag (1-4) VFD Min. Speed Level (0-999)
4xxx35(r/w;nv)	VFD Ramp Rate Dampling (1=fast, 20=slow)
4xxx36(r/w;nv)	Alternation Mode (0=ALO, 1n=manual, 255=AFO)
4xxx37(r/w;nv)	Purge Interval (1-24 hours; 0=inhibit)
4xxx38(r/w;nv)	Alternation Interval (1-168 hours, 0=inhibit)
4xxx39-4xxx46(r/w;nv)	Lead Lag (1-8) VFD Max. Speed Output (0-255)
4xxx47-4xxx54(r/w;nv)	Lead Lag (1-8) VFD Min. Speed Output (0-255)
4xxx55(r/w;v)	SIM mode Simulated Process Variable (0-999)
4xxx56(r/w;v)	Command word
4xxx57-4xxx58	(2 reserved)
4xxx59-4xxx64(r/o;nv)	Pump (1-6)Start Count
4xxx65(r/o;v)	Raw D/A 1 Output Word (0-255)
4xxx66(r/o;v)	Raw D/A 2 Output Word (0-255)
4xxx67(r/o;v)	Raw D/A 3 Output Word (0-255)
4xxx68(r/o;v)	Raw D/A 4 Output Word (0-255); reserved
4xxx69(r/o;nv)	AI Max. reading calibration constant (Min+1 to 999)
4xxx70(r/o;nv)	AI Min. reading calibration constant (0 to Max-1)
4xxx71(r/o;nv)	AI Max. input calibration constant (Min+1 to 16383)
4xxx72(r/o;nv)	AI Min. input calibration constant (0 to Max -1)
4xxx73-4xxx78 (r/o;nv)	Pump (1-6) ETM (0.1, 0.2, 0.5or 1.0 hours/count)
4xxx79-4xxx80(r/o)	(2 reserved)
4xxx81(r/o;nv)	Options Word (bitmap)
4xxx82(r/o;v)	Purge Interval Timer
4xxx83(r/o;v)	Alternation Interval Timer
4xxx84(r/o;v)	Units 7-segment LED Display bitmap
4xxx86(r/o;v)	Hundreds 7-segment LED Display bitmap
4xxx87(r/o;v)	Discrete LED Display ditmap
4xxx88(r/o;nv)	Discrete LED Flash Attribute Bitmap
4xxx89(r/o;v)	Switch Input/Status bitmap
4xxx90(r/o;nv)	NVRAM Checksum (0-65535)
4xxx91(r/o;nv)	Start Count (0-65535)
4xxx92(r/o;v)	Scan period (x100 uSec)
4xxx93(r/o;v)	Keypad Image (bitmap)
4xxx94(r/o;nv)	Number of pumps in alternation (1 to n)
4xxx95(r/o;v)	Bad Received Message Count (0-`-65535)
4xxx96(r/o;nv)	Firmware revision level (x100; eg.,300=300)
4xxx97(r/o;nv)	Unit Model number (2300, 2400, 2600, 3300)
4xxx98(r/o;v)	Seconds since key hit (0-65535, for SCADA watchdog)
4xxx99(r/o)	(1 reserved)

Relay Output Bitmap/ Limit Alarm Bitmap (4xxx06,r/o)

	DG2300	DG2400	DG2600	VG3300
0x0001	P-1	P-1	P-1	P-1
0x0002	P-2	P-2	P-2	P-2
0x0004	P-3	P-3	P-3	P-3
0x0008	Compressor	P-4	P-4	High Alarm
0x0010	Solenoid	Compressor	P-5	Low Alarm
0x0020	High Alarm	Solenoid	P-6	N/C
0x0040	Low Alarm	High Alarm	High Alarm	N/C
0x0080	N/C	Low Alarm	Low Alarm	N/C

0x2000	Input signal no present Alarm (input<1.5 mA or <0.35V>
0x4000	Low level Alarm
0x8000	High level Alarm

Logical/ Physical Pump Required (4xxx06,r/o)

0x0001	Pump 1 required
0x0002	Pump 2 required
0x0004	Pump 3 required
0x0008	Pump 4 required
0x0010	Pump 5 required
0x0020	Pump 6 required
0x0100	Lead Pump required
0x0200	Lag1 Pump required
0x0400	Lag 2 Pump required
0x0800	Lag 3 Pump required
0x1000	Lag 4 Pump required
0x2000	Lag 5 Pump required

Operating Mode (4xxx06,r/o)

0x0000	AUTOmatic
0x0001	SIMulate
0x0002	PROGram
0x0004	CALibrate
0x0008	RTU configuration

Command Word (4xxx56, r/w, violatile)

0x0001	Initiate Purge (toggle while Enable bit is set)
0x0002	Force Alternation (toggle while Enable bit is set)
0x0004	Reset P1 ETM and Start Count (toggle while Enable bit is set)
0x0008	Reset P2 ETM and Start Count (toggle while Enable bit is set)
0x0010	Reset P3 ETM and Start Count (toggle while Enable bit is set)
0x0020	Reset P4 ETM and Start Count (toggle while Enable bit is set)
0x0040	Reset P5 ETM and Start Count (toggle while Enable bit is set)
0x0080	Reset P6 ETM and Start Count (toggle while Enable bit is set)
0x8000	Enable Commands

Options Word (4xxx84-4xxx86, r/o)

0x0001	Live Zero
0x0002	Pump stagger-start on Boot only
0x0004	Disable SIM-mode deadman timer
0x0008	Disable PROG-mode deadman timer
0x0010	Disable RTU functions
0x0020	Disable entry into PROG, CAL, and RTU Config. modes
0x0300	Pump ETM scale selection (0-3):
	0x0000 Pump ETM 0.1 hour/count scale
	0x0100 Pump ETM 0.2 hour/count scale
	0x0200 Pump ETM 0.5 hour/count scale
	0x0300 Pump ETM 1.0 hour /count scale

7-Segment LED Display (4xxx84-4xxx86, r/o)

0x0001	Segment A (top)
0x0002	Segment B (upper right)
0x0004	Segment C (lower right)
0x0008	Segment D (bottom)
0x0010	Segment E (lower left)
0x0020	Segment F (upper left)
0x0040	Segment G (center)
0x0080	Segment H (decimal point)

Discrete LED Display (4xxx87), Discrete LED Flash Attribute (4xxx88, r/o)

	DG2300	**DG2400**	**DG2600**	**VG3300**	**RTU Config**
0x0001	Hi Alarm	Hi Alarm	Hi Alarm	Hi Alarm	RTU Address
0x0002	Lo Alarm	Lo Alarm	Lo Alarm	Lo Alarm	Kilobaud
0x0004	Lead Start	Lead	Lead	Lead	Base Register
0x0008	Lead Stop	Lag No. 1	Lag No. 1	Lag	Parity
0x0010	Lag Start	Lag No. 2	Lag No. 2	Standby	CTS Delay
0x0020	Lag Stop	Lag No. 3	Lag No. 3	Start	Master/Slave
0x0040	Standby Start	Start	Lag No. 4	Stop	Reply Timeout
0x0080	Standby Stop	Stop	Lag No. 5	Min Speed	
0x0100	Pump Alternate	Pump Alternate	Analog Out	Max Speed	Monitor
0x0200	Purge	Purge	Start/Max	Pump Alternte	NAK
0x0400	A.O. Min	A.O. Min	Stop/Min	Configure	XMT
0x0800	A. O. Max	A. O. Max	Alternate	Ramp Speed	RCV
0x1000	AUTO	AUTO	AUTO	AUTO	AUTO
0x2000	PROG	PROG	PROG	PROG	PROG
0x4000	SIM	SIM	SIM	SIM	SIM

Switch Input/Status (4xxx89,r/o)

0x0001	SW1 DIP Switch 1 is ON (Pumps in Alternation +4)
0x0002	SW1 DIP Switch 2 is ON(Pumps in Alternation +2)
0x0004	SW1 DIP Switch 3 is ON(Pumps in Alternation +1)
0x0008	SW1 DIP Switch 4 is ON(Hi alrm inhibit)
0x0010	SW1 DIP Switch 5 is ON(Lo alarm inhibit)
0x0020	SW1 DIP Switch 6 is ON(Slow AI response)
0x0040	SW1 DIP Switch 7 is ON(VFD Load-sharing)
0x0080	SW1 DIP Switch 8 is ON(Pump-out operation)
0x0100	PV is Negative
0x0200	In Purge Cycle
0x0400	A/D Converter Failed
0x0800	AUX IN Closed
0x1000	Lamp Test in progress
0x2000	Error indication is displayed

Keypad Image (4xxx93,r/o)

0x0001	AUTO
0x0002	PROG
0x0004	SIM
0x0008	STEP
0x0010	Up-arrow
0x0020	Down-arrow

B. Calibration Theory

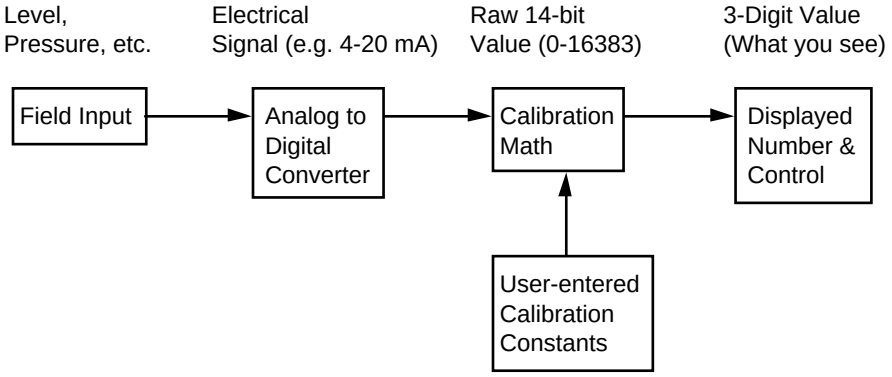

Figure A: Calibration Theory

There are two points calibrated on a graph, set by the operator. The Vari-Gage calculates the level based on drawing a line through these points, interpolating between them or extrapolating outside them. The endpoint values (Y-axis) are set with the UP and DOWN arrows, and the input readings (X-axis) are captured with the PROGram Key.

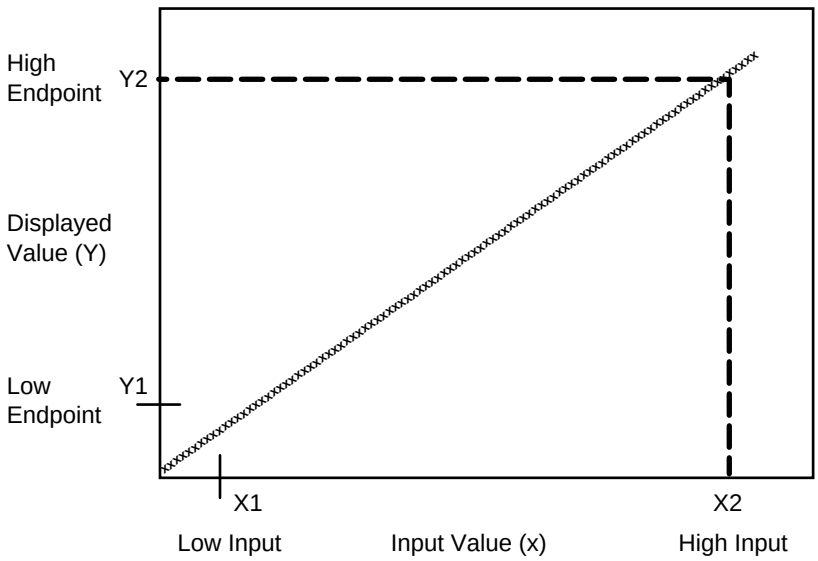

Figure B: The Calibration Function Graph

C. Calibration Math

Formula: $y = mx + b$ **where** $m = (y_2 - y_1)$ **divided by** (x_2-x_1); $b = y_1 - (mx_1)$
x_1 = ***Low Endpoint*** y_1 = ***Low input***
x_2 = ***High Endpoint*** y_2 = ***High input***

EXAMPLE: If the operator wanted to determine the proper scaling of the 4-20mA DC signal to a 1.0 to 10.0 foot level, the formula would be applied, as follows:

$y=mx+b$, where y is the desired level in feet.
m, or the ratio between the two values, is calculated by taking the minimum level (1 foot) and subtracting it from the maximum level (10 feet). This result is divided by the high milliampere reading (20mA DC) minus the low milliampere reading (4mA DC).

In equation format:
y_2= maximum level =10.0ft
y_1= minimum level=1.0ft
x_2= high milliampere reading=20mA DC
x_1= low milliampere reading=4mA DC
$m= (y_2-y_1)/(x_2-x_1)$=(10.0-1.0)/(20-4)=0.5625

b, or the offset, is calculated by multiplying the minimum milliampere signal by the ratio, m, and subtracting this from the minimum level.

In equation format:
$b=y_1-mx_1$=1-.5625(4)=-1.25

The final equation will be:
y= the desired level
x= the milliampere signal.
y= 0.5625x-1.25

If, for example, the level at 7.25mA DC was required, x replaces 7.25 in the final equation:
y= 0.5625(7.25)-1.25=2.828125ft

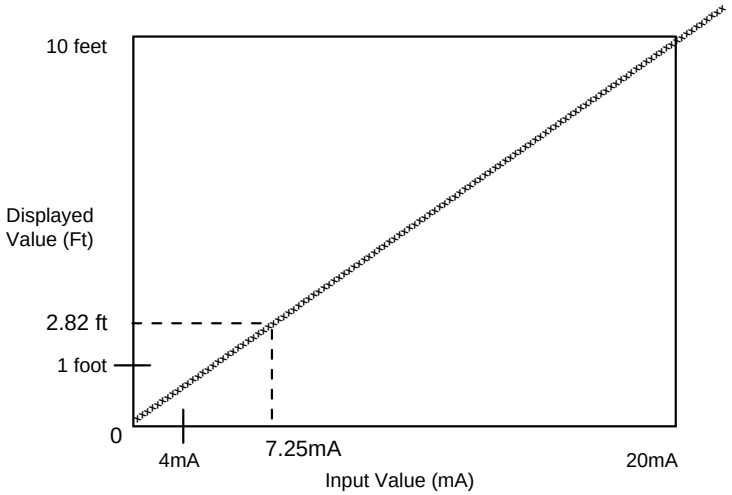

Figure C: Calibration Formula Example

D. Factory Default Settings

All Vari-Gage control systems are shipped from the factory with the following settings and calibrations unless otherwise directed at the time the order is placed:

High Alarm	10 feet
Low Alarm	2 feet
Lead (Pump 1) Start	4 feet
Lead (Pump 1) Stop	3 feet
Lag 1(Pump 2) Start	6 feet
Lag 1(Pump 2) Stop	5 feet
Lag 2(Pump 3) Start	8 feet
Lag 2(Pump 3) Stop	7 feet
Lead(Pump 1) MIN Speed	60%
Lead(Pump 1) MAX Speed	100%
Lag 1(Pump 2) MIN Speed	60%
Lag 1(Pump 2) MAX Speed	100%
Lag 2(Pump 3) MIN Speed	60%
Lag 2(Pump 3) MAX Speed	100%
Alternate	1
Ramp Speed	0

The Controller is factory calibrated for 0 - 35 feet of level with an integral bubbler transducer.

Index

Alarm(S) 45
Alternate 5, 30, 37
Alternation 29, 30
Analog Input 10, 13, 33
Analog Output 10, 32
AO 10
Auto 9
Automatic 30
Calibration 5, 10, 24, 25, 27, 33, 37
Centrifugal 16
Code(S) 37
Configuration 9, 11, 12, 16, 29, 30, 33
Damage 5, 17
Dip Switch 12
Drives 20, 23, 29, 30
Eeprom 9, 10, 26, 37
Electrical 20, 32
Endpoint 44
Error 9, 37
Error Code 9, 10, 27, 37
Formula 44
High Alarm 45
High Level 13
Input 7, 9, 10, 11, 13, 24, 25, 26, 27, 33, 37, 43, 44
Installation 32
Jumper(S) 11
Lag 16, 19, 20, 22, 23, 30, 45
Lamp 10
Lead 16, 19, 20, 22, 23, 30, 45
Led 9, 10, 13, 25, 26, 27, 29, 30, 31
Level Setpoint 29
Load Sharing 14
Low Alarm 45
Low Level 13
Manual 10, 30
Maximum Speed 16, 17, 19, 20, 30
Memory 9, 10
Minimum Speed 16, 17, 18, 19, 20, 30
Mode 9, 10, 14, 22, 24, 25, 26, 27, 29, 30, 31, 37
Mounting 32
Output 5, 7, 10, 14, 22, 29, 32
Pneumatic 26, 36
Process 5, 9, 11, 13, 26, 29
Programming 28
Pumps 9, 10, 12, 14, 16, 18, 19, 20, 21, 22, 30, 37
Ram 9, 37
Resolution 5, 25
Sensor 5, 10, 26
Setpoint 23, 29, 37
Sim Mode 9, 10, 26, 27, 31
Simulate 9
Snapshot 25, 26, 27
Speed Level Settings 20, 22, 29, 30
Standby 30
Theory 16, 43
Transducer 5, 10, 11, 26, 36
Troubleshooting 9, 10, 27, 37
Warranty 38
Wiring 25

